ASSEMBLY INSTRUCTION

BEFORE ASSEMBLY THIS PRODUCT,
PLEASE READ THIS INSTRUCTIONS CAREFULLY.



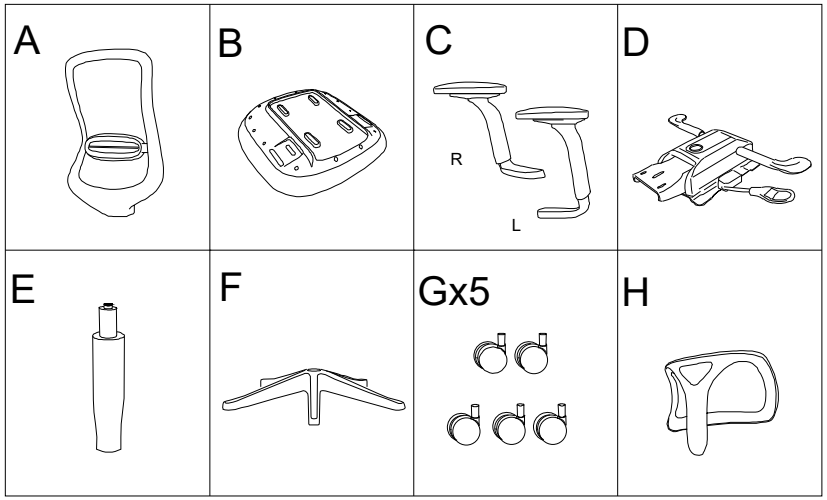

I x2+1 (M6X60MM)	O x2+1 (M6X16MM)
J x6+1 (M6X40MM)	L x3+1 (M8X17X1.5MM)
K x3+1 (M8X25MM)	M x3+1 (M8)
P x2+1 (M6X50MM)	N x1

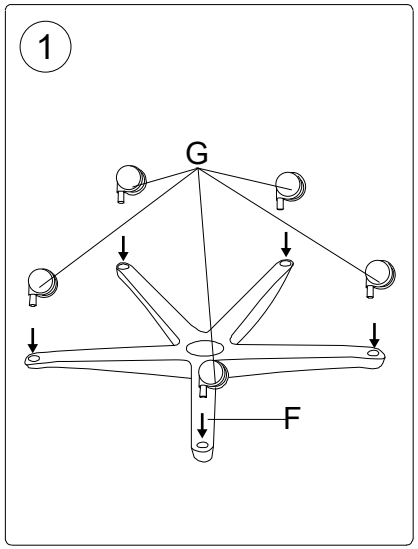

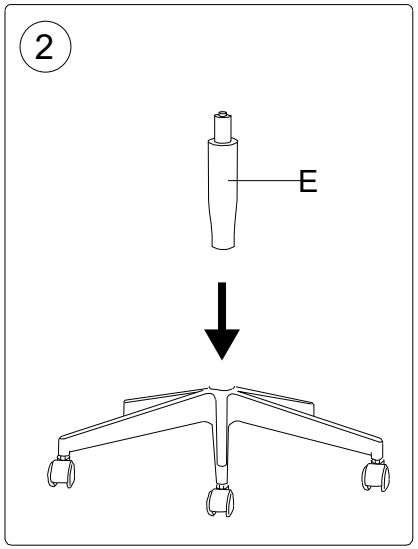

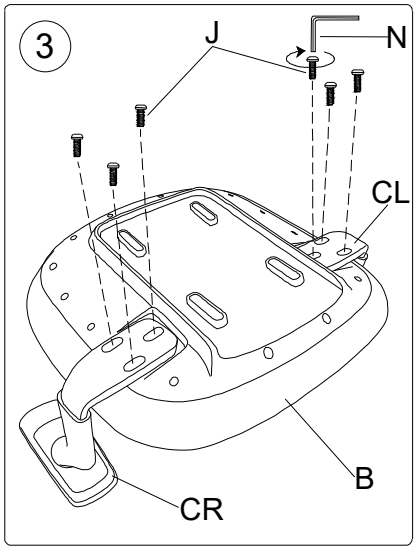

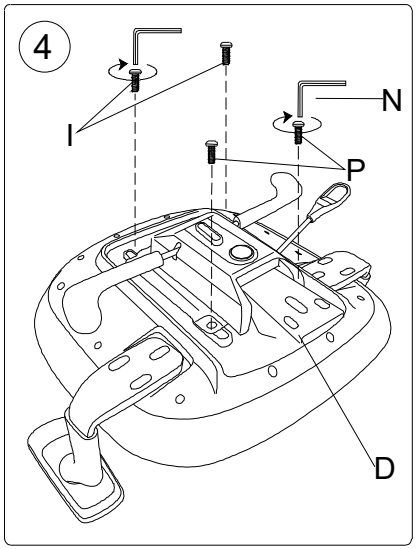

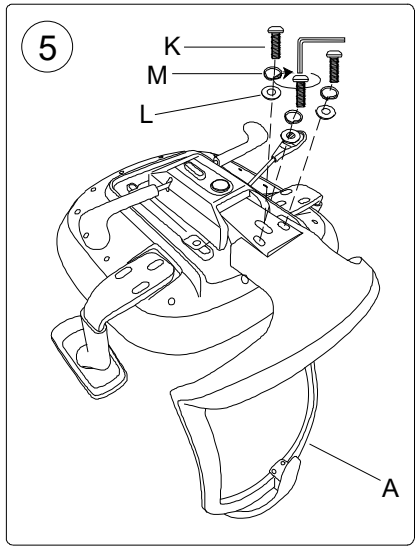

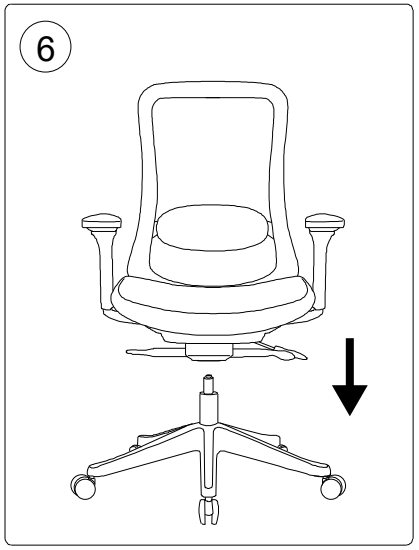

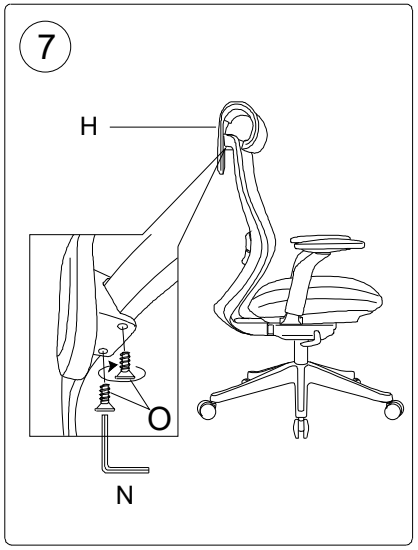



Function Guide

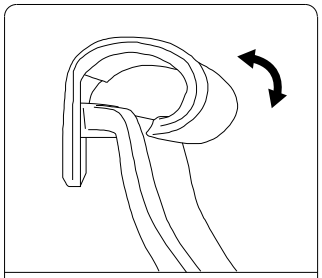

The headrest can be rotated.

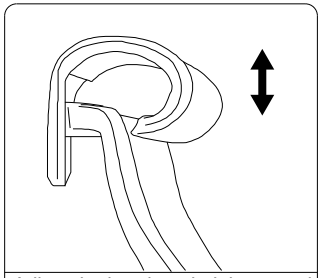

Adjust the headrest height up and down.

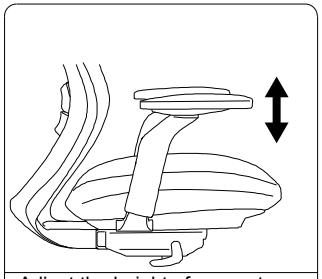

Adjust the height of armrest up and down.

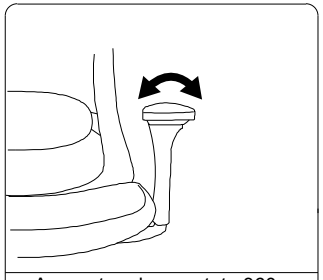

Armrest pad can rotate 360 degrees.

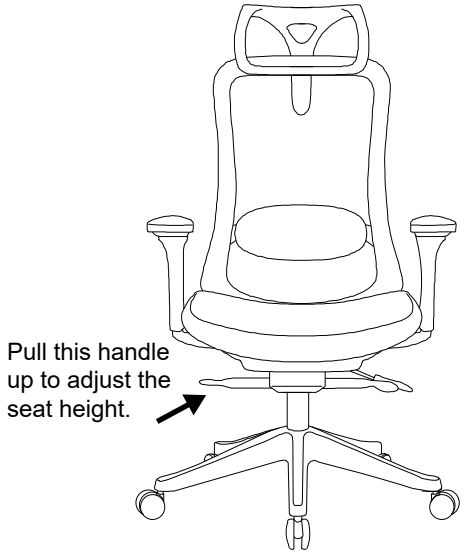

Pull this handle up to adjust the seat height.

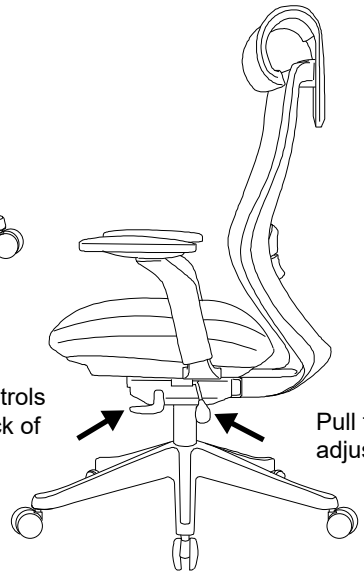

This handle controls angle of the back of the chair.

Pull this handle to adjust the seat depth.

WARNING

Failure to follow these instructions may result in serious injury.

1. This product is designed for sitting only. Do not stand on the seat.
2. Do not use this product unless all bolts and parts are firmly tightened.
3. If any parts are missing, damaged or worn, repair the product with the replacement parts from manufacturer.
4. Do not sit on the armrest of this product.
5. This product is designed to seat only one person at a time.
6. Children under 10 may requir e assistance and supervision to use this product.